Jurnal Pendidikan Ekonomi
DOI 10.17977/UM014v19i1p113

Research Article

Technology Acceptance Model Factors and AI Chatbot Capability: The Mediating Role of Technology Competency

Diana Dwi Pransiska[1], Choirul Nikmah[1*], Phattarapong Malawal[2]
[1]Faculty of Economics and Business, Universitas Negeri Surabaya, Indonesia
[2]Faculty of Economics, University of the Thai Chamber of Commerce, Thailand
*Corresponding email: choirulnikmah@unesa.ac.id

Abstract
The increasing use of AI chatbots in higher education creates opportunities for students to receive support throughout their final-project preparation. However, effective utilization may depend not only on technology acceptance but also on students' competency in using the technology. This research investigates the effects of technology acceptance model factors on AI chatbot capability, with technology competency as a mediating variable among office administration education students preparing their final project. A quantitative explanatory design was employed involving 187 students of the office administration education program at Universitas Negeri Surabaya. Furthermore, the data were analyzed using SEM-PLS with SmartPLS version 4. The findings indicate that Technology Competency full mediation the relationship between attitude toward using and AI Chatbot Capability. This study contributes to the TAM literature by incorporating Technology Competency as a mediation mechanism for explaining AI chatbot utilization. More broadly, students are encouraged to use AI chatbots wisely, critically and responsibly to support their final project preparation.

Keywords: AI chatbot capability, education students, technology acceptance model, technology competency, quality education

INTRODUCTION

The continued development of Artificial Intelligence (AI) has reshaped numerous aspects of academic activities across higher education institutions. AI influences student learning dynamics and is increasingly integrated into the academic process (Chen et al., 2020). Senior students often face challenges in academic writing, such as developing ideas, constructing coherent arguments, paraphrasing, and managing citations and references according to scholarly writing conventions (Bram & Angelina, 2022). These difficulties can prolong final project preparation and increase the risk of delay in completing one's studies. Andre et al. (2023) show that delay in completing final project is a common problem in higher education. This situation has led students to use various digital technologies as sources of information and discussion partners to support completing their final project. One technology widely used by students in academic activities is ChatGPT, including by students in education (Mogavi et al., 2023). A prior research by Dewi (2024) also shows that ChatGPT serves as a means of facilitating academic writing by helping students develop ideas and overcome writer's block. Recent findings suggest that the increasingly intensive use of AI chatbots in academic activities may diminish

Received: 20 July 2026; Revised: 17 September 2026; Accepted: 04 October 2026
This is an open access article under the CC BY-NC-SA 4.0 license

students' cognitive abilities and critical thinking skills if not balanced with appropriate use (Zhai et al., 2024).

The increasing use of AI chatbots has made them part of students' academic activities, particularly as a tool to support the preparation of final project (Nugroho et al., 2025). The findings of Nugroho et al. (2025) suggesting that students view the technology as beneficial and relatively easy to using AI to support the preparation of their final project. However, Margono et al. (2024) emphasize that AI should be used responsibly, as its use may lead to dependency and raise academic integrity concerns when not accompanied by adequate supervision. Cao and Mao. (2026) further emphasize that the use of AI in academic writing requires students to critically evaluate AI-generated outputs. Similarly, Entriawan et al. (2026) underscore the relevance of verifying the accuracy of AI-generated information before incorporating it into academic writing. These findings suggest that the effective use of AI chatbots depends not only on the availability of the technology but also on students' ability to critically evaluate and verify the information generated by AI to ensure its optimal use. Consequently, the ability of AI chatbots to supporting the preparation of final project vary across students. This situation suggests that AI chatbots can effectively support final-project preparation calls for further examination of the factors affecting their effective use.

Davis (1989) introduced the Technology Acceptance Model (TAM) as a theoretical framework for explaining how individuals respond to and adopt new technologies. Within this model, technology acceptance is primarily determined by users' perceptions of the technology's usefulness and the extent to which it can be used with minimal effort. In the TAM framework, perceptions of usefulness and ease of use subsequently influence users' attitudes toward the technology, subsequently influencing their intention to adopt it. Students' use of AI chatbots for final-project preparation is shaped by their perceived value and usability of the technology, which can subsequently affect their attitudes and intentions toward its adoption. This aligns with the research by Rahman et al. (2025), which shows that TAM factors significantly influence AI chatbot capability. Previous research has employed the TAM framework to examine explain the acceptance and adoption of AI chatbots. However, research findings on the effect of TAM factors on the use of AI chatbots remain mixed.

Previous research identified four central TAM constructs: perceived usefulness, perceived ease of use, attitude toward using, and behavioral intention, have a positive and significant effect on the use of AI chatbots (Agustian et al., 2022; Rahman et al., 2025; Wijayanti et al., 2025). Rohana et al. (2025) found that perceived ease of use did not significantly affect behavioral intention to use ChatGPT. Meanwhile, Cano and Nunez. (2024) showed that perceived usefulness was not significantly associated with influence users' attitudes toward using. In addition, Susanto et al. (2026) demonstrated that perceived ease of use significantly influenced ChatGPT usage is only partially supported. These differing findings suggest that relationships among TAM constructs have not yet yielded consistent results in explaining AI chatbot adoption. This inconsistency suggests that factors beyond the TAM's core constructs likely also influence AI chatbot adoption. One factor that may influence these relationships is Technology Competency, an individual's ability to use technology effectively, supported by their knowledge, skills, and attitudes (European Commission, 2007). Some studies (e.g., Ardiyanti & Susilowati, 2024; Bećirović et al., 2025; Cao & Mao, 2026) indicate that students with stronger technology competencies will use AI-based technologies.

Beyond the variation in previous research findings, existing research on AI chatbot utilization has largely examined students within specific academic fields or programs, such as medical students (Saif et al., 2024), accounting students (Segun et al., 2025), engineering students (Abolle-okoyeagu et al., 2026), computer science students (Nugroho et al., 2025), and information systems students (Saputra et al., 2026), as well as students from various other academic programs, without specifically focusing on students in the office Administration Education program (Agustian et al., 2022; Rahman et al., 2025; Rahmaningtyas & Purnama, 2025; Wijayanti et al., 2025). Meanwhile, research specifically examining the acceptance of AI chatbots among education students remains limited. Office administration education students' characteristics in using AI chatbots may differ because preparing a final project requires digital literacy, critical thinking, and academic skills in managing information. Therefore, this study develops a model that positions technology competency as a mediator between TAM factors and AI chatbot capability among office administration education students during their final-project preparation. This model is expected to provide an empirical contribution to explaining the determinants shaping the effectiveness of AI chatbot utilization in students' final project preparation. Accordingly, the present research examines how variables within the TAM influence AI chatbot capability, with technology competency serving as a mediator for office administration education students engaged in final-project work.

METHOD

This research adopts a quantitative methodology using a causal research design. Primary data were collected through the distribution of questionnaires. The participants were students enrolled in the Office Administration Education Program at the Faculty of Economics and Business, Universitas Negeri Surabaya (UNESA). with a population of 350 students; thus, the number of participants was determined based on the Slovin's formula, is 187 students. A stratified random sampling technique was employed to select the respondents, ensuring that representatives are selected from each class in equal proportions. This study consists of three variables such as exogenous variables, which cover our TAM-related constructs: perceived usefulness, perceived ease of use, attitude toward using, and behavioral intention; a mediation variable, namely technology competency, and an endogenous variable, namely AI Chatbot Capability. These variables were measured using several indicators, as shown in Table 1.

Table 1
Overview of the instrument

Construct	Variable	Indicators	Total Items	Source
Perceived Usefulness	Exogenous (X1)	1. Useful 2. Time efficiency 3. Increased productivity	4	Hutauruk & Saparso, 2023; Vidarshika *et al.,* 2025
Perceived Ease of Use	Exogenous (X2)	1. Simple interaction 2. Easy to learn and use 3. Flexible timing	5	Hutauruk & Saparso, 2023; Segun *et al.,* 2025

Construct	Variable	Indicators	Total Items	Source
Attitude Toward Using	Exogenous (X3)	1. Positive attitude towards usage 2. AI chatbots are commonly used 3. Attitude of ethical acceptance	6	Chowdhury et al., 2024; Lund et al., 2025; Ou & Malmstr, 2024
Behavioral Intention	Exogenous (X4)	1. Intention to use 2. Providing recommendations 3. Commitment to continue using	6	Guo & Erdenebold, 2025; Irliana et al., 2022; Polyportis & Pahos, 2025
Technology Competency	Mediation (Z)	1. Operational capabilities 2. Adaptability 3. Digital literacy 4. Problem solving	5	King et al., 2017; Perdomo & Alberto, 2024; Rahman et al., 2025
AI Chatbot Capability	Endogenous (Y)	1. Response accuracy 2. Usability and responsiveness 3. Information quality	6	Chen et al., 2021; Elizabeth et al., 2024; Grace et al., 2025; Mourabit et al., 2025; Rahman et al., 2025

Source: Authors (2026)

Based on drawing the TAM, a conceptual framework is developed to investigate the relationships between the variables examined in this research. Figure 1 presents the proposed framework.

Figure 1
Conceptual model

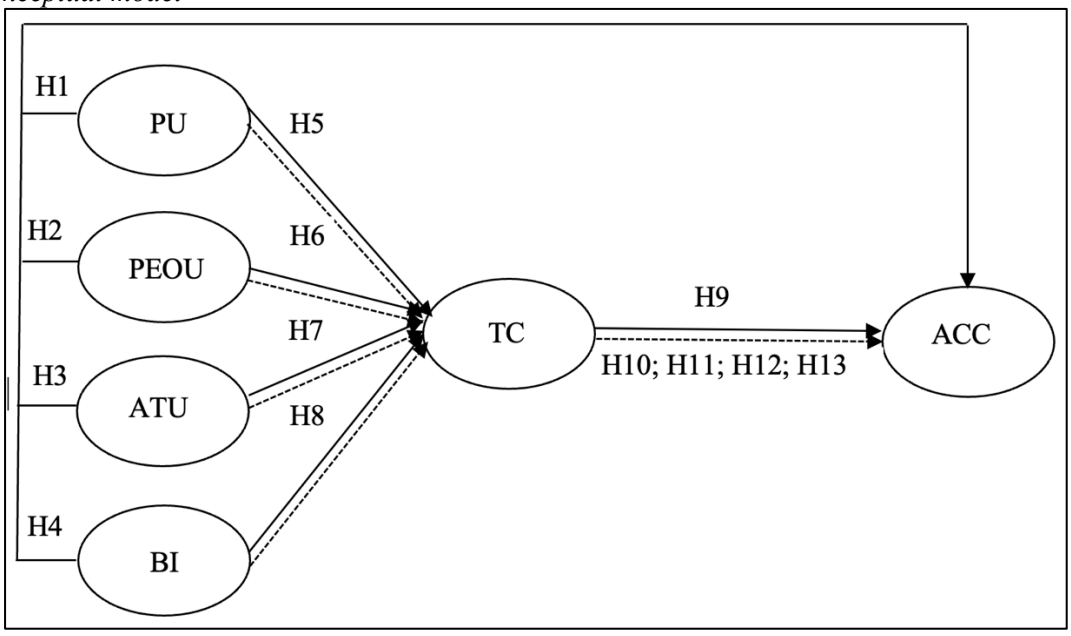

Source: Authors 2026

Data Analysis

The collected data were examined through Partial Least Squares Structural Equation Modelling (PLS-SEM) using SmartPLS version 4.1.1.6. The analysis comprised three successive stages: model fit assessment, outer model analysis, and inner model analysis. The Standardized Root Mean Square Residual (SRMR) was used to evaluate model fit. Subsequently, the measurement model was examined to determine construct reliability and validity based on indicator reliability, convergent validity, average variance extracted (AVE), and discriminant validity, and collinearity (VIF). Assessment of the structural model included the coefficient of determination (R^2), effect size (f^2), predictive relevance (Q^2), and hypothesis testing. Bootstrapping was subsequently conducted to evaluate the statistical significance of both direct and indirect relationships between the constructs.

RESULT

Characteristic Respondents

This study involved 187 students in the Office Administration Education program from the class of 2023. Female respondents made up the majority (88.24%), while males accounted for 11.76%. ChatGPT was the most widely used AI chatbot (72.73%), followed by Claude AI (10.69%), Gemini AI (6.42%), Perplexity AI (5.35%), and other AI chatbots (4.81%). Based on frequency of use for final-project preparation, the majority of respondents used AI chatbots several times a week (76.47%), followed by daily use (17.65%) and once a week (5.88%). These characteristics indicate that most respondents regularly use AI chatbots, which is relevant to this study's context. Table 2 presents the detailed results of the characteristics of respondents.

Table 2
Characteristics of respondents

Criteria	Characteristics	Frequency (N=187)	Percentace
Gender	Male	22	11.76%
	Female	165	88.24%
AI Chatbots used	ChatGPT	136	72.73%
	Gemini AI	12	6.42%
	Claude AI	20	10.69%
	Perplexity AI	10	5.35%
	Other AI Chatbots	9	4.81%
Frequency of AI chatbots usage for final-project preparation	Daily	33	17.65%
	Several times a week	143	76.47%
	Once a week	11	5.88%

Source: Authors (2026)

Descriptive Statistics

Descriptive statistics were used to describe respondents' perceptions of the research constructs. Based on Table 3, all constructs had relatively high mean scores, ranging from 3.846 to 4.183. In terms of response ranges, individual construct scores spanned from a minimum of 2.333 for BI and ACC to a maximum of 5.000 across all constructs. ATU has the highest mean score ($\overline{X}$ 4.183; SD = 0.495; Min = 2.833; Max = 5.000), indicating that respondents tend to have a positive attitude toward the use of AI chatbots, while ACC has the lowest mean score ($\overline{X}$ = 3.846; SD = 0.583; Min = 2.333;

Max = 5.000), although it remains at a relatively high level. Meanwhile, the mean scores for TC, PU, PEOU, and BI also indicate positive perceptions regarding technological competence, usefulness, ease of use, and intention to use AI chatbots. The relatively low standard deviations (0.495–0.583) suggest that the variation in respondents' answers is relatively limited.

Table 3
Descriptive statistics test

Construct	Min	Max	Mean	Standard Deviation
PU	2.500	5.000	4.064	0.580
PEOU	2.800	5.000	4.049	0.541
ATU	2.833	5.000	4.183	0.495
BI	2.333	5.000	4.010	0.572
TC	2.800	5.000	4.089	0.534
ACC	2.333	5.000	3.846	0.583

Source: Authors (2026)

SEM-PLS Results

Model Fit

The model fit assessment yielded an SRMR value of 0.072, which is below the recommended threshold of 0.08, indicating that the model meets the specified criterion. Accordingly, the model meets the required fit criteria and can be used for subsequent analysis.

Table 4
Model fit

	Saturated Model	Estimated Model
SRMR	0.072	0.072

Note. SRMR = Standardized Root Mean Square Residual.
Source: processed using SmartPLS 4

Outer Model

The outer model is used to assess the validity, reliability, and discriminant validity of the constructs employed in this study. Outer loading analysis is used to assess the validity of each item in the research. The criteria established by Hair et al. (2021) require an outer loading value greater than 0.70, Cronbach's Alpha (CA) greater than 0.70, Composite Reliability (CR) greater than 0.70, Average Variance Extracted (AVE) greater than 0.50, and VIF values were below than of 3. Values falling below these thresholds indicate issues with the constructs used in the study. Table 4 presents the detailed results of the outer model.

Table 5
Testing the outer model

Item	Outer Loading	CA	CR	AVE	VIF
PU1	0.787	0.787	0.797	0.609	1.639
PU2	0.797				1.671
PU3	0.797				1.503
PU4	0.738				1.508
PEOU1	0.800	0.826	0.828	0.590	1.785
PEOU2	0.717				1.518

Item	Outer Loading	CA	CR	AVE	VIF
PEOU3	0.798				1.843
PEOU4	0.780				1.758
PEOU5	0.742				1.527
ATU1	0.776	0.806	0.820	0.507	1.961
ATU2	0.738				1.855
ATU3	0.602				1.383
ATU4	0.756				1.952
ATU5	0.664				1.421
ATU6	0.721				1.999
BI1	0.768	0.876	0.878	0.617	1.841
BI2	0.756				1.761
BI3	0.825				2.254
BI4	0.819				2.181
BI5	0.749				1.776
BI6	0.793				1.913
TC1	0.780	0.830	0.831	0.595	1.758
TC2	0.757				1.615
TC3	0.774				1.649
TC4	0.766				1.806
TC5	0.780				1.899
ACC1	0.801	0.867	0.831	0.600	2.554
ACC2	0.752				2.352
ACC3	0.793				1.991
ACC4	0.785				2.028
ACC5	0.756				1.746
ACC6	0.760				1.778

Note. PU = perceived usefulness; PEOU = perceived ease of use; ATU = attitude toward using; BI = behavioral intention; TC = technology competency; ACC = AI chatbot capability; CA = Cronbach Alpha; CR = Composite Reliability; AVE = Average Variance Extracted; VIF = Variance Inflation Factor.
Source: processed using SmartPLS 4

The measurement model was evaluated using outer loading, Cronbach's alpha, composite reliability (CR), and average variance extracted (AVE). The outer loadings ranged from 0.602 to 0.825. Across the constructs, the outer loading values fell within the following ranges: PU (0.738-0.797), PEOU (0.717-0.800), ATU (0.602-0.776), BI (0.749-0.825), TC (0.757-0.780), and ACC (0.752-0.801). The majority of the indicators met or surpassed the recommended threshold of 0.70. However, ATU3 (0.602) and ATU5 (0.664) had outer loadings below 0.70. According to Hair et al. (2021) indicators with loadings between 0.40 and 0.70 do not necessarily need to be removed if their removal does not improve the construct's composite reliability and average variance extracted, while their content validity remains relevant. In this study, ATU3 and ATU5 were therefore retained because the ATU construct demonstrated acceptable reliability and convergent validity, with a Cronbach's alpha of 0.806, CR of 0.820, and AVE of 0.507. Furthermore, all constructs met the recommended criteria, with Cronbach's alpha values ranging from 0.787 to 0.876, CR values from 0.797 to 0.878, AVE values from 0.507 to 0.617, and VIF values from 1.383 to 2.554. Thus, the measurement model demonstrated adequate reliability and convergent validity.

Table 6
Discriminant validity

Variable	ACC	ATU	BI	PEOU	PU	TC
ACC						
ATU	0.726					
BI	0.824	0.828				
PEOU	0.822	0.894	0.892			
PU	0.720	0.869	0.890	0.837		
TC	0.756	0.884	0.821	0.792	0.775	

Note. PU = perceived usefulness; PEOU = perceived ease of use; ATU = attitude toward using; BI = behavioral intention; TC = technology competency; ACC = AI chatbot capability.
Source: processed using SmartPLS 4

Discriminant validity was assessed using the heterotrait – monotrait ratio (HTMT). The HTMT analysis yielded values between 0.720-0.894, indicating that each construct satisfied the discriminant validity criterion, as all values remained below the 0.90 threshold. The highest value was observed between ATU and PEOU (0.894), which remained within the acceptable threshold. Thus, all constructs demonstrated adequate discriminant validity, indicating that each construct was empirically distinct from the others.

Inner Model

The results of the inner model assessment show that the R^2 value for ACC is 0.593, indicating that PU, PEOU, ATU, BI, and TC jointly explain 59.3% of the variance in ACC. Meanwhile, the R^2 value for TC is 0.612, indicating that PU, PEOU, ATU, and BI explain 61.2% of the variance in TC. The Q^2 values of 0.587 for ACC and 0.550 for TC, both above zero, indicate that the model has predictive relevance for the endogenous constructs, as illustrated in Table 7.

Table 7
Testing the inner model

Variable	R-square	Q-Square
ACC	0.593	0.587
TC	0.612	0.550

Note. ACC = AI chatbot capability; TC = technology competency.
Source: processed using SmartPLS 4

Based on the F^2 values, ATU has a medium effect on TC (0.161), while BI has a small effect on TC (0.076) and ACC (0.086), and PEOU has a small effect on ACC (0.062). The remaining effects are below 0.02, indicating very limited contributions to the endogenous constructs, as illustrated in Table 8.

Table 8
Testing the inner model

Variable	F-Square
PU → ACC	0.000
PEOU →ACC	0.062
ATU → ACC	0.001
BI → ACC	0.086
TC →ACC	0.033

Variable	F-Square
PU → TC	0.006
PEOU → TC	0.004
ATU →TC	0.161
BI → TC	0.076

Note. PU = perceived usefulness; PEOU = perceived ease of use; ATU = attitude toward using; BI = behavioral intention; TC = technology competency; ACC = AI chatbot capability.
Source: processed using SmartPLS 4

Hypothesis Testing

The direct effect analysis indicates that five of the nine proposed hypotheses are supported. PEOU has a positive and significant effect on ACC (β = 0.277, t = 2.961, p = 0.003), supporting H2. BI also has a positive and significant effect on ACC (β = 0.342, t = 4.002, p < 0.001), supporting H4. Furthermore, ATU has a positive and significant effect on TC (β = 0.416, t = 5.157, p < 0.001), while BI has a positive and significant effect on TC (β = 0.303, t = 3.287, p = 0.001), supporting H7 and H8, respectively. TC also has a positive and significant effect on ACC (β = 0.185, t = 2.161, p = 0.031), supporting H9. In contrast, PU does not significantly affect ACC (β= 0.013, t = 0.149, p = 0.881), ATU does not significantly affect ACC (β = 0.041, t = 0.441, p = 0.659), and neither PU nor PEOU significantly affects TC (β = 0.078, t = 0.923, p = 0.356; β = 0.065, t = 0.717, p = 0.473, respectively). Accordingly, H1, H3, H5, and H6 are not supported, as illustrated in Table 9.

Table 9
Direct effect

Hypothesis (H)		Original Sample	T Statistic	P Value	Decision
H1	PU → ACC	0.013	0.149	0.881	Not supported
H2	PEOU → ACC	0.277***	2.961	0.003	Supported
H3	ATU → ACC	0.041	0.441	0.659	Not supported
H4	BI → ACC	0.342***	4.002	0.000	Supported
H5	PU → TC	0.078	0.923	0.356	Not supported
H6	PEOU → TC	0.065	0.717	0.473	Not supported
H7	ATU → TC	0.416***	5.157	0.000	Supported
H8	BI → TC	0.303***	3.287	0.001	Supported
H9	TC → ACC	0.185**	2.161	0.031	Supported

The indirect effect analysis shows that one of the four proposed mediation hypotheses was supported. ATU had a positive and significant indirect effect on ACC through TC (β = 0.077, t = 2.044, p = 0.041), supporting H12. This finding indicates that TC mediates the relationship between ATU and ACC. In contrast, the indirect effect of PU on ACC through TC was not significant (β = 0.014, t = 0.776, p = 0.438). Similarly, the indirect effects of PEOU on ACC through TC (β = 0.012, t = 0.630, p = 0.528) and BI on ACC through TC (β = 0.056, t = 1.636, p = 0.102) were not significant. Therefore, H10, H11, and H13 were not supported, whereas H12 was supported, as illustrated in Table 10.

Table 10
Indirect fffect

Hypothesis (H)		Path Coefficients	T Statistik	P Value	Decision
H10	PU → TC → ACC	0.014	0.776	0.438	Not supported
H11	PEOU → TC → ACC	0.012	0.630	0.528	Not supported
H12	ATU → TC → ACC	0.077**	2.044	0.041	Supported
H13	BI → TC → ACC	0.056	1.636	0.102	Not supported

Note. 1) ***, **, and * = significant at level 1%, 5%, and 10% (respectively). 2) PU = perceived usefulness; PEOU = perceived ease of use; ATU = attitude toward using; BI = behavioral intention; TC = technology competency; ACC = AI chatbot capability.
Source: processed using SmartPLS 4

DISCUSSION

The findings of this study demonstrate that factors within the demonstrate that the factors within the Technology Acceptance Model (TAM) play different roles in explaining AI Chatbot Capability (ACC) and Technology Competency (TC) among Office Administration Education students who are preparing their final project. Of the nine direct relationships tested, five showed positive and significant effects: PEOU on ACC, BI on ACC, ATU on TC, BI on TC, and TC on ACC; whereas four relationships were not significant: PU on ACC, PU on TC, PEOU on TC, and ATU on ACC. PEOU has a positive and significant effect on ACC, indicate that students who perceive AI chatbots as easy to learn and use tend to rate them as more capable of supporting the preparation of their final project. This finding aligns with Rahman et al., (2025), who found that perceived ease of use influences AI chatbot capability. Ease of interaction can help students develop ideas, formulate questions, obtain information, and improve their scholarly writing skills. However, PEOU did not have a significant influence on TC. This suggests that ease of use does not automatically reflect competence in crafting prompts, evaluating outputs, or adapting AI-generated information to academic needs. Thus, AI chatbots may be perceived as easy to use without directly enhancing students' Technology Competency.

Behavioral Intention (BI) was associated with both ACC and TC, suggesting that students' intention to use AI chatbots is related to their perceptions of chatbot capability and their technology competency. However, whether repeated use or learning opportunities explain the relationship between BI and TC remains unclear and warrants further investigation. Furthermore, ATU had a statistically significant positive effect on TC. A favourable attitude toward AI chatbot use is associated with greater Technology Competency among students. A positive attitude can encourage students to explore the functions of AI chatbots and learn how to use and evaluate their outputs. The findings support earlier research emphasizing the importance of digital and computer competencies in technology use, including studies by Scheel et al. (2022); Sharif-nia et al. (2024). Conversely, ATU had no direct effect on ACC, suggesting that a positive attitude toward AI chatbots alone is insufficient to form the perception that they possess high capabilities.

Technology Competency (TC) has a significant positive influence on ACC. The results suggest that students' ability to operate, adapt to, and evaluate AI chatbots output relater to their assessment of the AI chatbot's ability to support their final project preparation. Students with higher Technology Competency tend to be better able to formulate appropriate prompts, assess the relevance and accuracy of the generated

information, and adapt the AI's outputs to their academic needs, this finding aligns with Sharif-nia et al. (2024) who highlight the importance of students' computer competencies in technology-significant learning. Entriawan et al. (2026) also highlight the importance of the ability to critically evaluate AI outputs in an academic context. Thus, AI Chatbot Capability cannot be understood solely in terms of technological characteristics but is also closely tied to users' competencies in utilizing and evaluating the technology. However, the relationship identified in this study pertains to students' assessments of AI chatbot capability rather than an objective evaluation of the chatbot's performance. Consequently, these findings should not be interpreted as evidence that students' technology competence automatically enhances the actual accuracy or performance of the AI chatbot.

Conversely, Perceived Usefulness (PU) did not have a statistically significant effect on ACC or TC. The non-significant relationship between PU and ACC may reflect differences between students' perceived usefulness of AI chatbots and their assessments of chatbot capability in supporting final-project preparation. Similarly, recognizing the benefits of AI chatbots does not necessarily correspond to students' competence in operating and evaluating the technology. These findings indicate inconsistencies with previous research. Rahman et al. (2025) found an effect of PU on AI Chatbot Capability, whereas this study did not find such a relationship. Some studies (e.g., Rohana et al., 2025; Cano & Nunez., 2024) also showed mixed relationships among TAM constructs in the context of AI technology use. These differences may be related to the context of technology use and user characteristics. In this study, AI chatbots were used specifically to support the preparation of final project, a process that requires students to develop research ideas, manage academic information, formulate research problem, produce academic writing, and critically evaluate AI-generated outputs. Therefore, perceptions of the benefits of AI chatbots alone may not adequately explain either the perceived capabilities of AI chatbots or students' technological competencies.

The mediation analysis result provides further insight indicate that the indirect effects of PU on ACC via TC, PEOU on ACC via TC, and BI on ACC via TC are not significant. In contrast, the indirect effect of ATU on ACC via TC is significant, while the direct effect of ATU on ACC is not, indicates the presence of full mediation. The results indicate that having a favourable attitude toward AI chatbot usage relates to AI Chatbot Capability trough Technology Competency, rather than through a direct relationship. Thus, students' positive attitudes toward AI chatbots become relevant to their perception of AI Chatbot Capability when they possess the competence to operate, utilize, and evaluate the technology appropriately. Meanwhile, the not significant indirect effects of PU, PEOU, and BI indicate that these three factors do not sufficiently explain ACC trough TC. Although BI has a direct effect on both ACC and TC, its indirect effect via TC is not significant. This suggests that TC is not a universal mediator for all TAM factors but rather serves as a specific mechanism within the association between ATU and ACC.

The significant indirect-only full mediation of Technology Competency when connecting students' usage attitudes to their AI Chatbot Capability indicates that positive attitudes toward AI chatbot use need to be supported by students' competency in utilizing the technology. Practically, such insights indicate that tertiary education providers and lecturers should not only encourage the appropriate use of AI chatbots but also strengthen students' Technology Competency through guidance and learning activities that develop their ability to utilize AI chatbots appropriately and critically evaluate AI-generated

information in accordance with academic needs. Thus, integrating technology competency development into AI-related academic support can provide a more appropriate strategy for assisting students in their use of AI chatbots during final-project preparation. This study provides empirical support for integrating Technology Competency into the TAM framework, not only as an additional predictor but also as a mechanism linking attitudes toward use of AI chatbots with perceptions of AI Chatbot Capability in supporting the preparation of final projects.

CONCLUSION

Based on the findings, Technology Competency (TC) full mediation the relationship between attitude toward using (ATU) and AI Chatbot Capability (ACC) through an indirect-only mediating role, whereas ATU does not significantly affect ACC directly. This finding indicates that ATU contributes to ACC through Technology Competency rather than through a direct effect. Furthermore, perceived ease of use (PEOU), behavioral intention (BI), and TC have statistically significant positive direct effects on ACC, while ATU and BI significantly affect TC. Among the significant direct effects on ACC, BI shows the strongest effect. The findings demonstrate that the effects of TAM factors on AI Chatbot Capability are not uniformly significant. The results highlight the role of Technology Competency as an important mechanism in linking students' attitudes toward AI chatbot use with AI Chatbot Capability. These results offer empirical evidence for extending the TAM framework by incorporating Technology Competency to better explain AI chatbot utilization among Office Administration Education students preparing their final project.

Several limitations should be considered when interpreting the results obtained from this research. First, the respondents were limited to 187 Office Administration Education students from one university and one cohort, thereby limiting application of these results to students in other study programs and educational institutions. Second, reliance on cross-sectoral data and responses reported by participants cannot adequately reflect changes in students' actual use and Technology Competency over time. Third, this study focused specifically on AI chatbot utilization in final-project preparation, leaving the relationships among TAM factors, Technology Competency, and AI Chatbot Capability in other academic contexts less explored. Future research could therefore involve participants from a broader and more diverse population across study programs and institutions, employ longitudinal or mixed-method approaches to track how skills in technology and proficiency with AI chatbots evolve over extended periods, and investigate the proposed model in other academic contexts to determine whether the observed relationships remain consistent.

Authors Contribution

DDP: Writing – original draft, data collection, formal analysis. CN: Conceptualization, methodology, writing – review and editing. PM: Data curation and formal analysis.

AI usage statement

During the preparation of this manuscript, the authors used OpenAI to improve grammar, language clarity, and readability. All AI-assisted revisions were reviewed and edited by the authors, who take full responsibility for the final content of the manuscript.

Acknowledgement
The authors are grateful to Prodi Pendidikan Administrasi Perkontoran (S1 PAP) Universitas Negeri Surabaya for supporting data collection for this research

REFERENCES

Abolle-okoyeagu, C. J., Ezenkwu, C. P., Ibeke, E., Onoja, O. P., & Ezeonwumelu, V. U. (2026). Engineering students and AI in education: a TAM-based study of perceptions, acceptance, and barriers to adoption. *Cogent Education, 13*(1), 1. https://doi.org/10.1080/2331186X.2026.2614148

Agustian, R. D., Khasanah, E. F., Sari, S. Y., Ammaryafi, M. F., & Susilowati, N. (2025). Pengaruh perceived usefulness, perceived ease of use dan digital literacy terhadap penggunaan artificial intelligence oleh mahasiswa di era pendidikan 4.0. *Liabilities (Jurnal Pendidikan Akuntansi), 8*(2), 1-11.

Alzoubi, H. M. (2024). Factors affecting ChatGPT use in education employing TAM: A Jordanian universities' perspective. *International Journal of Data and Network Science, 8*(3), 1599-1606. https://doi.org/10.5267/j.ijdns.2024.3.007

Andre, Suciati, N., Fabroyir, H., & Pardede, E. (2023). Educational data mining clustering approach: Case study of undergraduate student thesis topic. IEEE Access, 11(September), 130072–130088. https://doi.org/10.1109/ACCESS.2023.3332818

Ardiyanti, A., & Susilowati, E. (2024). The technology readiness and perceived usefulness mediate digital competencies and artificial intelligence technologies. F*okus Bisnis Media Pengkajian Manajemen dan Akuntansi, 23*(1), 28-43.https://doi.org/10.32639/fokbis.v23i1.862

Bećirović, S., Polz, E., & Tinkel, I. (2025). Exploring students' AI literacy and its effects on their AI output quality , self - efficacy , and academic performance. *Smart Learning Environments, 3*. https://doi.org/10.1186/s40561-025-00384-3

Bram, B., & Angelina, P. (2022). Indonesian tertiary education students' academic writing setbacks and solutions. *International Journal of Language Education, 6*(3), 267-280.

Cano, J. R., & Nunez, N. A. (2024). Unlocking innovation: How enjoyment drives GenAI use in higher education. *Frontiers in Education,* 1–9. https://doi.org/10.3389/feduc.2024.1483853

Cao, Z., & Mao, Z. (2026). Journal of English for academic purposes exploring EFL undergraduate students' critical AI literacy in academic writing. *Journal of English for Academic Purposes, 82*, 101733. https://doi.org/10.1016/j.jeap.2026.101733

Chen, J. S., Le, T. T. Y., & Florence, D. (2021). Usability and responsiveness of artificial intelligence chatbot on online customer experience in e-retailing. *International Journal of Retail & Distribution Management, 49*(11), 1512-1531. https://doi.org/10.1108/IJRDM-08-2020-0312

Chen, L., Chen, P., & Lin, Z. (2020). Artificial intelligence in education: A review. *IEEE Access, 8*, 75264–75278. https://doi.org/10.1109/ACCESS.2020.2988510

Chowdhury, A., Hafiz, R., Tasnim, B., & Gulmeher, F. (2024). AI chatbots: A disguised enemy for academic integrity ?*International Journal of Educational Research Open, 7*, 100396. https://doi.org/10.1016/j.ijedro.2024.100396

Davis, F. D. (1989). Perceived usefulness, perceived ease of use, and user acceptance of information technology. *MIS Quarterly, 13*(3), 319–340. https://doi.org/https://doi.org/10.2307/249008

Dewi, F. (2024). The inception of ideas: How students use ChatGPT for academic writing. *Jurnal Sosioteknologi, 23*(2), 291-304.

El Mourabit, I., Jai Andaloussi, S., Ouchetto, O., & Miyara, M. (2025). AI chatbots in higher education: Opportunities and challenges for personalized and mobile learning. *International Journal of Interactive Mobile Technologies (iJIM), 19(*12), 19–37. https://doi.org/10.3991/ijim.v19i12.54163

Elizabeth, J., Seraquive, G., & Álvarez-muñ, P. (2024). Unveiling the core constructs: A statistical approach to evaluating user experience with Chatbots in higher education (A case study from a university in Ecuador). *Journal of Infrastructure, Policy and Development, 8*(10), 6381.

Entriawan, N. D., Drajati, N. A., Sumardi, S., & So, H. J. (2026). Trustworthiness of AI in academic writing: Perspectives from Indonesian EFL students. *The Asian Journal of Applied Linguistics, 10*(1), 1280-1280. https://doi.org/https://doi.org/10.25442/hku.31338805

European Commission. (2007). Key competences for lifelong learning: European Reference Framework.

Grace, C., En, K., Lourdes, M. De, & Møller, C. G. (2025). Metrics of success: Evaluating user satisfaction in AI chatbots. In 2024 The 8th International Conference on Advances in Artificial Intelligence (ICAAI 2024), 1, 1. Association for Computing Machinery. https://doi.org/10.1145/3704137.3704182

Guo, H., & Erdenebold, T. (2025). Artificial intelligence factors influencing intention to adopt an AI chatbot for learning in higher education: An integrated PLS-SEM, IPMA, and ANN approach. *Computers and Education,* 9(51), 100477. https://doi.org/10.1016/j.caeai.2025.100477

Hair, J. F., Hult, G. T. M., Sarstedt, M., Ringle, C. M., Gudergan, S. P., Danks, N. P., & Ray, S. (2021). Partial least squares structural equation modeling (PLS-SEM) Using R: A Workbook. In SAGE Publications. Springer. https://doi.org/10.1007/978-3-030-80519-7

Hutauruk, B. N., & Saparso, S. (2023). Application of the technology acceptance model (TAM) in testing the acceptance model of application BORN (Business & Operational Risk Management Nindya Karya). *Enrich Journal Management, 13*(3), 2060-2072. https://doi.org/https://doi.org/10.52436/1.jpti.784

Irliana, N., Rahim, M., Iahad, N. A., Yusof, A. F., & Al-sharafi, M. A. (2022). AI-based chatbots adoption model for higher-education institutions: A hybrid PLS-SEM-Neural Network Modelling Approach.

King, H., Miller, C. L., & Miller, C. L. (2017). Building technology competency: An evidence-based approach to improving student technology skills. *Journal of Formative Design in Learning, 1*(1), 45-55. https://doi.org/10.1007/s41686-017-0001-5

Lund, B., Mannuru, N. R., Teel, Z. A., Lee, T. H., Ortega, N. J., Simmons, S., & Ward, E. (2025, September). Student perceptions of AI-assisted writing and academic integrity: Ethical concerns, academic misconduct, and use of generative AI in higher education. In AI in Education (Vol. 1, No. 1, p. 2). MDPI.

Margono, H., Saud, M., & Falahat, M. (2024). Virtual tutor, digital natives and AI: Analyzing the impact of ChatGPT on academia in Indonesia. *Social Sciences & Humanities Open, 10*(July), 101069. https://doi.org/10.1016/j.ssaho.2024.101069

Mogavi, R. H., Deng, C., Kim, J. J., Zhou, P., Kwon, Y. D., Metwally, A. H. S., ... & Hui, P. (2023). Exploring user perspectives on chatgpt: Applications, perceptions, and implications for ai-integrated education. arXiv preprint arXiv:2305.13114. http://arxiv.org/abs/2305.13114

Nugroho, F. A., Herlambang, A. D., Rachmadi, A., & Sasmita, E. E. (2025). Analisis persepsi mahasiswa rumpun ilmu komputer terhadap pemanfaatan artificial intelligence [Analysis of computer science students' perception of the utilization of artificial intelligence in thesis writing]. *Jurnal Teknologi Informasi dan Ilmu Komputer, 12*(4), 829–842.

Ou, A. W., & Malmström, H. (2024). Perceptions and usage of AI chatbots among students in higher education across genders, academic levels, and fields of study. Computers and Education: Artificial Intelligence, 7, Article 100259. https://doi.org/10.1016/j.caeai.2024.100259

Perdomo, B., & Alberto, O. (2024). Design and validation of a questionnaire to assess digital skills for research. *Journal of e-Learning and Knowledge Society, 20*(3), 83–89.

Polyportis, A., & Pahos, N. (2025). Understanding students' adoption of the ChatGPT chatbot in higher education: The role of anthropomorphism, trust, design novelty, and institutional policy. Behaviour & Information Technology, 44, 315–336. https://doi.org/10.1080/0144929X.2024.2317364

Rahman, M. K., Ismail, N. A., Hossain, A., & Hossen, M. S. (2025). Students' mindset to adopt AI chatbots for effectiveness of online learning in higher education. *Future Business Journal, 12*, 1. https://doi.org/10.1186/s43093-025-00459-0

Rahmaningtyas, A., & Purnama, B. (2025). Studi perbandingan model TAM dan UTAUT dalam adopsi teknologi chatbot AI untuk penyelesaian tugas akhir mahasiswa. *Jurnal Manajemen Pendidikan dan Ilmu Sosial, 6*(6), 5091–5108.

Rohana, W. D., Nugraha, J., & Koblianska, I. (2025). Application of TAM to explore awareness and enjoyment of the use of artificial intelligence ChatGPT in students. *Jurnal Pendidikan Administrasi Perkantoran, 13*(2), 498–512. https://doi.org/10.26740/jpap.v13n2.p498-512

Saif, N., Khan, S. U., Shaheen, I., Alotaibi, A., Alnfiai, M. M., & Arif, M. (2024). ChatGPT: Validating the technology acceptance model (TAM) in the education sector via a ubiquitous learning mechanism. *Computers in Human Behavior, 154*, Article 108097. https://doi.org/10.1016/j.chb.2023.108097

Saputra, A. D., Aqilahsyah, D., & Pratama, D. (2026). Analisis pengaruh penggunaan artificial intelligence terhadap produktivitas akademik mahasiswa sistem informasi menggunakan technology acceptance model. *JISTech (Journal of Islamic Science and Technology), 11*(1). https://doi.org/10.30829/jistech.v11i1.29704

Scheel, L., Vladova, G., & Ullrich, A. (2022). The influence of digital competences, self-organization, and independent learning abilities on students' acceptance of digital learning. *International Journal of Educational Technology in Higher Education, 19*, Article 44. https://doi.org/10.1186/s41239-022-00350-w

Segun, O., Petrus, F., & Kok, J. (2025). Artificial intelligence tools usage: A structural equation modeling of undergraduates' technological readiness, self-efficacy, and

attitudes. *Journal for STEM Education Research, 8*(2), 257–282. https://doi.org/10.1007/s41979-024-00132-1

Sharif-Nia, H., Allen, K., Arslan, G., Reardon, J., She, L., Ghahrani, N., Rahmatpour, P., & Fomani, F. K. (2024). E-learning acceptance: The mediating role of student computer competency in the relationship between the instructor and the educational content. *Teaching and Learning in Nursing, 19*(1), 5–10.

Susanto, H., Mutalif, A. Q., Setiana, D., & Besar, N. (2026). From usefulness to motivation: A TAM–SDT perspective on AI adoption and problematic internet use in higher education. *Frontiers in Education.* https://doi.org/10.3389/feduc.2025.1699827

Vidarshika, W., Dayapathirana, N., & Ranasinghe, A. (2025). Understanding AI chatbot adoption in education: The role of perceived usefulness, ease of use, and anthropomorphic tendencies. In 2025 International Research Conference on Smart Computing and Systems Engineering (SCSE). IEEE. https://doi.org/10.1109/SCSE65633.2025.11031020

Wijayanti, A. S., Faroqi, A., & Ridwandono, D. (2025). Peran kepercayaan dalam kesadaran, penerimaan, dan adopsi teknologi AI di pendidikan tinggi: Analisis dengan model TAM modifikasi. *Jurnal Pendidikan dan Teknologi Indonesia, 5*(4), 1175–1191.

Zhai, C., Wibowo, S., & Li, L. D. (2024). The effects of over-reliance on AI dialogue systems on students' cognitive abilities: A systematic review. *Smart Learning Environments, 11*, Article 28. https://doi.org/10.1186/s40561-024-00316-7